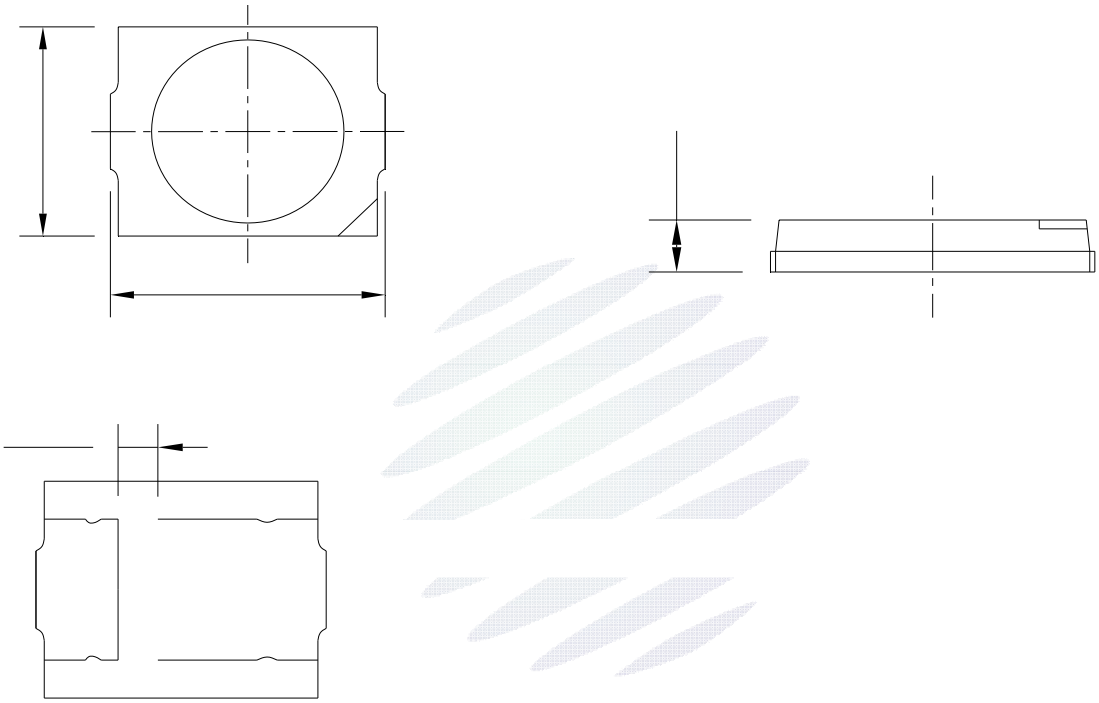

1. mm.
2. ±0.05mm.